THE SUNBEAMER

A Newsletter for The Sunbeam Car Clubs Of South Africa

Volume 7 July 2026



The Sunbeam Car Clubs Of South Africa

Clubs For Owners And Enthusiasts Of All Rootes Group Vehicles

The Sunbeam Sports Car Club of South Africa, based in Johannesburg, Gauteng, is one of the oldest car clubs in South Africa and has evolved to its present format from the origins of the very first Sunbeam Club created in the 1960's in the Western Cape, and is a founder member of SAVVA. The Cape Sunbeam Car Club, based in Stellenbosch, Western Cape, followed the same evolution and was created a few years later.

Both clubs are for members who appreciate the products of The Rootes Group and are open to all Rootes vehicle owners and enthusiasts, and work toward promoting the ownership, preservation, maintenance, enjoyment and creation of general public awareness of these fine vehicles and both Clubs organise regular club events and meetings for members and participate in general automotive shows and exhibitions within their regional areas.

This monthly newsletter is a voluntary newsletter created by an ex member of both clubs for the combined members of the clubs, and is not an official newsletter of any of the two clubs.

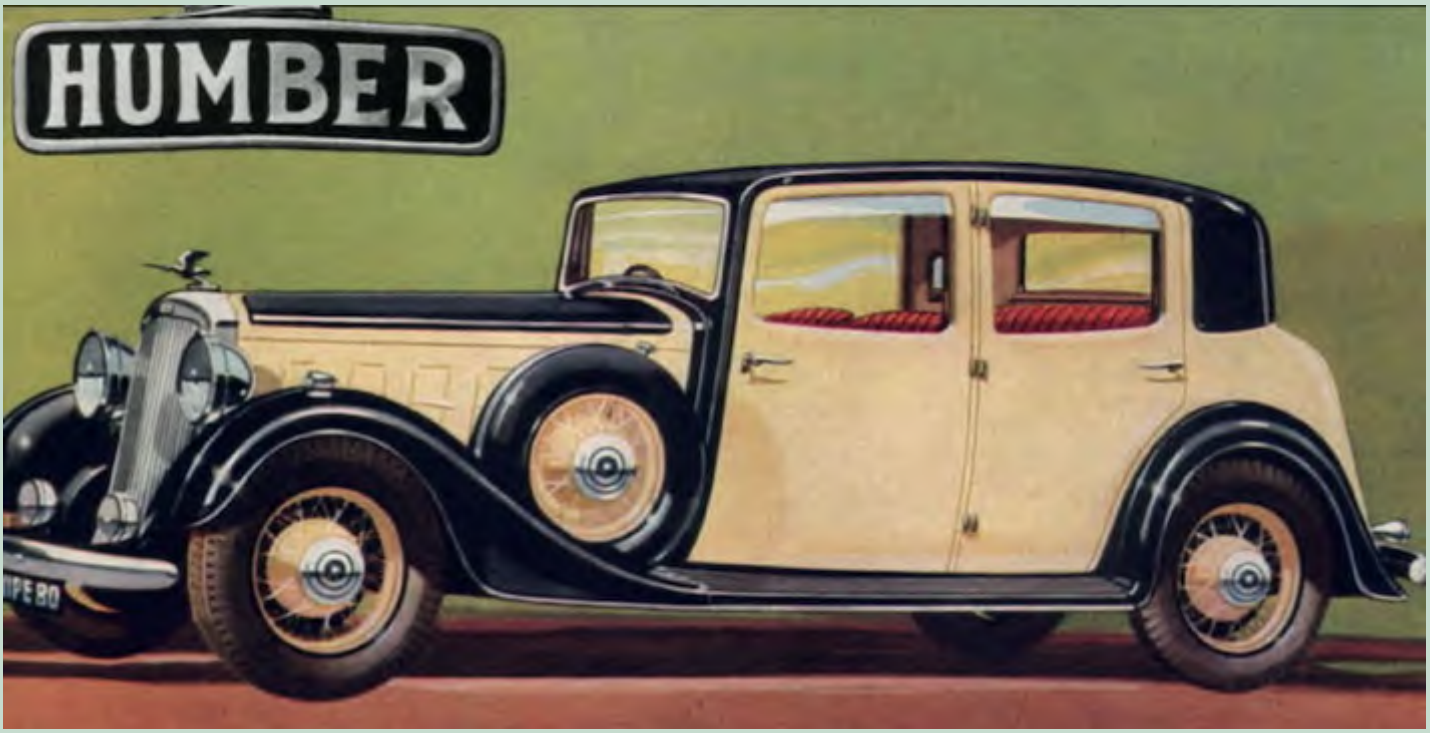

Our feature car on the front page is a 1935 Humber super Snipe. See the Road Test in this episode

Readers of The Sunbeamer are advised to use caution in following any technical or other advice read in the newsletter as the newsletter and the Sunbeam clubs can accept no responsibility for its accuracy or reliability. The views expressed in the newsletter do not necessarily represent the views of the clubs

As a club, we were all very sad to hear of the passing away of one of the oldest previous members of the club, Doug Smith,
Sid Herbet has submitted a tribute to Doug, included here

It was with a sad heart that I received the news that Doug Smith had passed away. I do not know when I first met him, but he just seemed to always have been there.

Doug once told me that the greatest joy in his life is when he is driving his Series 3 Sunbeam Alpine. He was truly proud of that car.

Doug ran a business called Owl Machine Tools that dealt with second hand Machines. He enjoyed helping people to obtain Machine / Tools to suit their needs. He would design and build a product to suit your needs. If you needed an obsolete tool, he had the ability and contacts to find what you needed.

I always laughed at him because he was so busy helping other people that he never did his own work. He once needed a Starter Bendix with an odd number of teeth for his car, I gave him a complete starter with the required Bendix, but he just never got around to fitting it himself. I think that he got someone to fit it for him.

He liked old Dinkey toys and he once made a hydraulic press for my workshop in exchange for some old Dinky toys.

It has never became clear as to why he never renewed his membership of our club, but he always stayed in contact and still helped members with tooling problems

Over the last few years his health deteriorated and he moved into a cottage on Uplands farm with Ian Cass. I understand that some days he was very sick, and then the next day he was in the workshop working. I think that the final straw was when he fell and fractured his hip.

May he rest in peace.

Sid Herbet.

Editor's Rambling

Welcome to the July edition of The Sunbeamer

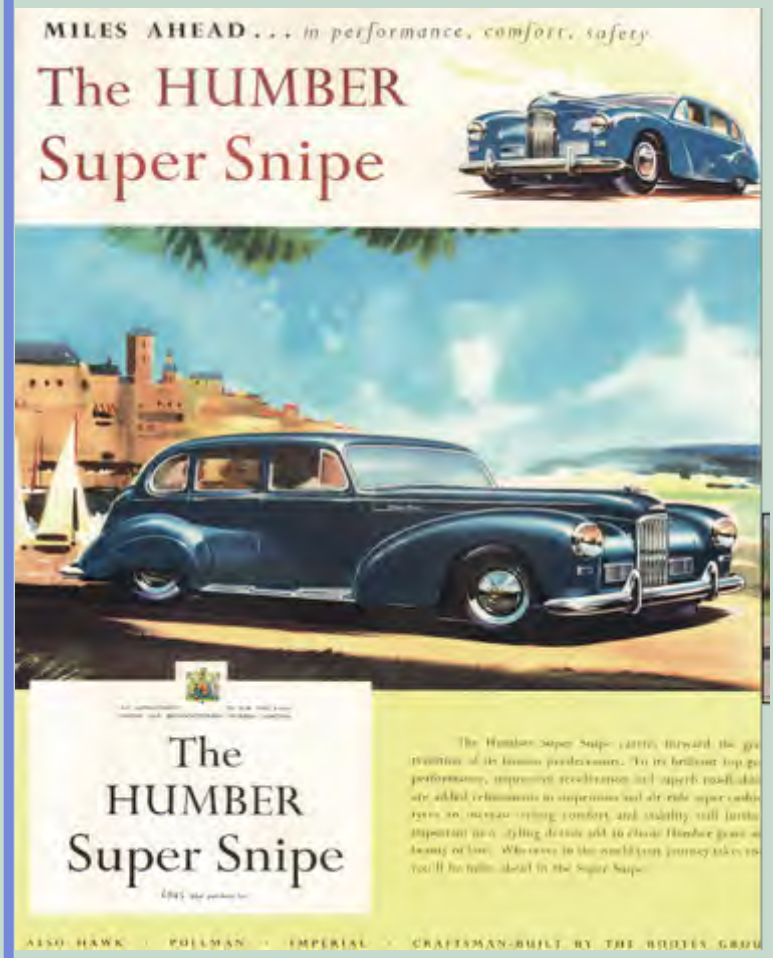

I am going to start with a little bit of maybe some critical comment on the Rootes advertisements in the 1950's and early 1960.s.

I have on quite a few occasions mentioned how ridiculous some of the Rootes ads looked like by drawing the cars to be very elongated, possibly to make them look sleeker and more stream iined, this could possibly be the result of Lord Rootes' obsession with the American Car Market.

To me they look terrible and our past generation must have been very gullible car shoppers. Look at how extremely long they have drawn the Humber Super Snipe in this ad. I can not imagine that it was not noticed and commented on, although I have yet to see a 1950's comment on the drawings

We will have another look at some more Tiger information that I have managed to scrape together for this month. This is an article written by the editor of the *Tiger Tales, the magazine of the California Association Of Tiger Owners (C A T)* about the production volumes of the Tiger.

Although we are all sad to read about how the Chrysler bean counters killed the Tiger, it is to my mind equally sad to see from this article that in fact, Tiger sales had been steadily dropping and one of the reasons that the MK II Tiger was initially not planned for RHD ,was that there were still some MK I Tigers unsold in the UK.

After that, being an avid F1 fan (However, not a Hamilton fan as he is continually blaming either his tyres, or his road holding, or his setup, or his engineer etc) I am very interested in the technology of what has gone into these cars, or as Richard Hammond of Top Gear once said, the *"Electronic space ships"* they drive today and in this edition, I will try to tell you how they have managed to create what is called the *"Invisible gear shift",* ie upshifting gears while engine power is never dropped.

It is as Wrex Tarr, the Rhodesian comedian would say in his talk of Jamisie Bondi, "It is diabolical, very clever,"

Have you ever wondered if they did road tests of cars in the 1930's, before the War, well apparently the motoring magazines were as active as any other time and to show you I have extracted a road test of a Humber Super Snipe from the *"Old Faithful", Volume 56, Number 3 of June 2026,* there glossy quarterly magazine of the *Post vintage Humber Car club in the UK (PVHCC*), it being a copy of an article in the "Practical motorist" of March, 1935.

Tiger Production Volumes (Acknowledgement to Brain Glenn)

Extract taken from Cut & Thrust magazine no 184 0f Summer 2026

Analysis of Sunbeam Tiger production provides insight into the short, but robust history of these special cars. Data for analyis reflect entries transcribed from the Jensen ledgers with 6,968 cars documented between April 1964 and June 1967. Tigers proluced in the months prior to June 1964 were Alpine Fords (AF) 1 hrough 11 pre-production development cars, the three Le Mans cars and AF-3 (B9470001) shipped to Shelby on the US West coast for the upcoming racing season. However, Tiger producion began in earnest in June of 1964 with the production of 44 units. It is likely these were to be delivered to dealers for demontrators as was the case with B9470040LRXFE built June 23 andelivered in to Hi-Performance Motors in Los Angeles on August 8. These early deliveries, through B9470056LRXFE, were fitted with Borg-Warner gear boxes.

High Tiger production numbers in the second half of 1964 was in all likelihood in response to the demonstrators being put to good use and generating orders. Production over the next few months accelerated peaking at 510 units in January 1965. Peak production in January through March 1965 was, in part, driven by the inclusion for the first time of right-hand drive (RHD) models, 4, 90 and 234, respectively, in anticipation of the March release to the home market. These RHD numbers represent between 14 and 38 percent of a month's Tiger production.

It was noted that production numbers for the month of November 1964 were extremely low (n=63) relative to the surrounding months of October and December with 481 and 451 units, respectively. Research indicates the sudden drop in production was in response to a worker's strike that month. Birmingham Daily Post (November 4, 1964) states "Production of the Sunbeam Tiger sports model by Jensen Motors Ltd., West Bromwich, has been completely brought to a halt by the dispute ...".

By April 1965, Tiger production slows ranging between 100 and 200 units per month through June. For July 1965, production has further dropped with only 60 Tigers produced. This is likely in response to the shift from MkI Tigers (JAL Series 56####) to MKIA (JAL Series 66####) in August and coincidental with the UK summer vacation season (Graham Vickery, personal communication 2/13/26). In the 23 months that follow, Tiger production shows a steady decline from a high of 348 in September to a low of 31 in June 1967. Average production of the period was approximately 140 units per month. Monthly totals for the final year of production (June 1966 to June 1967) were relatively flat at around 100 cars per month. A spike in January 1967 is likely in response to the introduction of the MkII Tiger. The final 31 Tigers produced in June 1967 mark a time in automotive history ended the dream that became a reality, if only for a short while. •

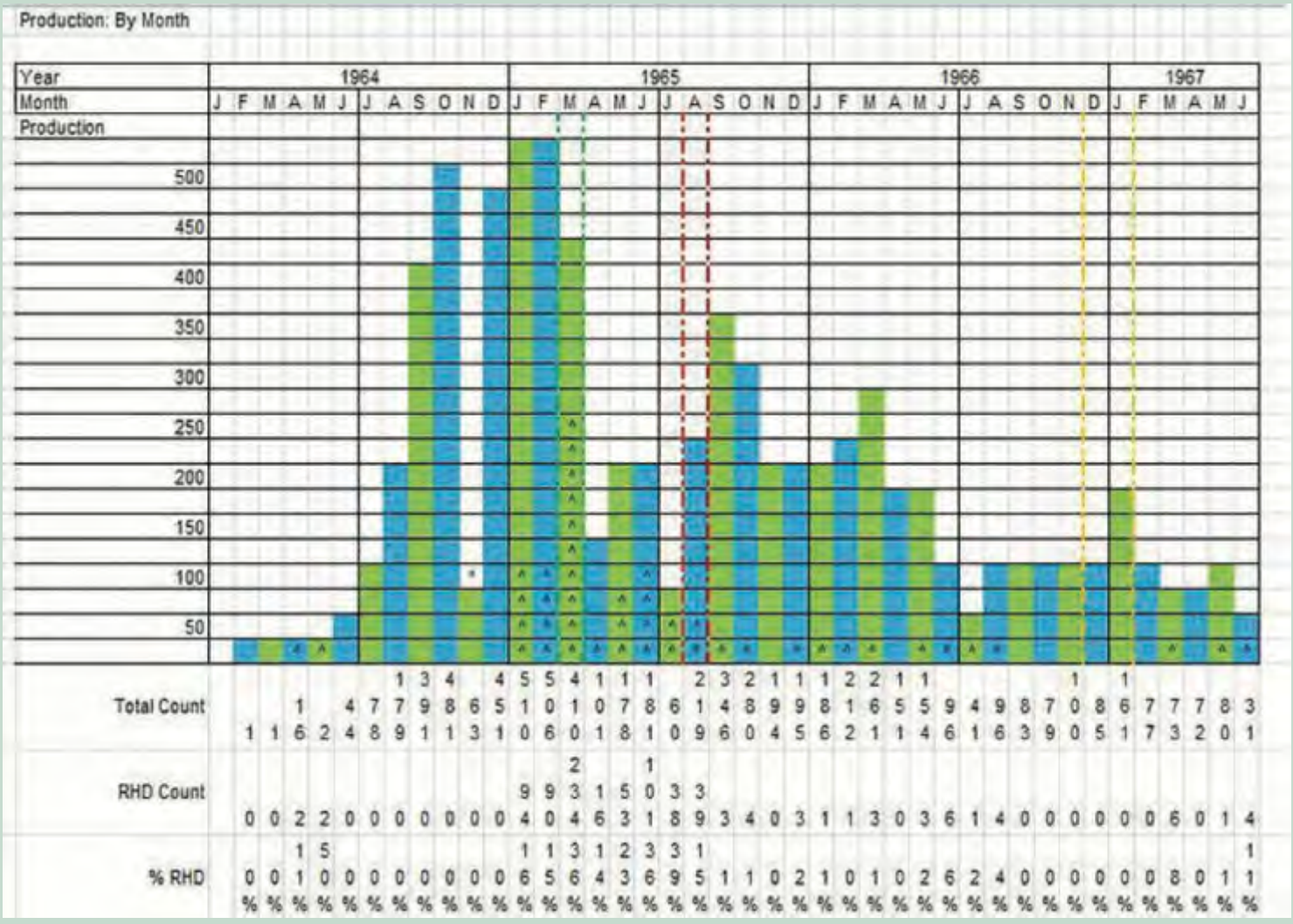

Editor's Tech Talk - The Evolution of Fi Gearboxes

In F1 racing in the late 1970's when drivers were real men in dangerous cars and not pampered prima donna's in electronic spaceships like today, we look at what the driver had to do when approaching a bend at speed

Right foot on the brake
Left foot on the clutch
Right hand on the gear lever to engage 4th gear
Heel of right foot keeps accelerator down to maintain engine revs, while still braking
Turn into the corner
Left foot leaves the clutch
Right foot pushes accelerator pedal.

All this is done within one second and so for a Gran Prix race like Monaco, gear changes have to be done at least 50 times per lap, resulting in about 3,800 changes for the race and often resulted in drivers's hands starting to bleed





The other problem that every team had to accept was that the gear lever had to be physically linked with levers and rods to the gearbox going around the engine making it difficult to make the body thinner to decrease wind resistance. The teams lived with these situations until 1978 when the brilliant Ferrari chief engineer Mauro Forghieri decided to look into automatic gearboxes as Ferrari was beginning to develop their turbo engine and the turbos were massive and were causing serious problems in that every time the driver had to change gears, the revs fell, and the turbos lost pressure and thus power was lost, until the revs picked up again.



Editor's Tech Talk - The Evolution of Fi Gearboxes

Forghieri decided that gear changes had to be made quicker to reduce the time the engine revs fell and built a test system that worked with two buttons and tested it at Fiorano. Ferrari's private track.

Ferrari test driver, Giorgio Enrico liked the gearbox but Ferrari F1 driver, Gilles Villeneuve did a 100 laps and hated it as the gear changes were harsh and he was convinced it would not last and the fact that changes were not totally under driver controls, so he requested it not to be put on his car, and Enzo Ferrari told Forghieri to pull the project.

That was in 1979 when the cockpit of a Ferrari F1 car was simplicity itself, three dials, steering wheel Ferrari badge, steel gear lever on the side, no electronics so the status quo was retained for the next ten years or so.



Then, in 1987, John Barnard, the brilliant designer who had introduced the carbon fibre F1 cars, moved to Ferrari and wanted to make the cars narrower too reduce wind drag and was faced with the same linkage problem, so once again, he looked at the original idea of electronic gear changes. However, instead of using buttons to change gears as was originally designed, he adopted Enzo's son, Piero Ferrari's idea who had suggested little levers behind the steering wheel that could be activated much faster than looking for a button that eventually became the paddles of today. Gear changes showed to be much faster, now taking only 100ms, but in testing, the system broke down a lot with battery charging problems, sometimes not having enough power to operate the shifting. But Barnard still pressed on because he knew that a quicker gear change could in itself have a significant effect, not only to make a slimmer body possible but also save time in itself.

Take Monaco that needs 50 gear changes per lap and has 77 laps, from an average of one second per gear change, if we could only save half of that, with every shift, so save 0,50 ms per shift, we get:

50 shifts per lap x 0,0050 ms = 0,25 seconds X 77 laps = 19,25 seconds per race, a full pit stop So Barnard persisted and in March 1989, at Interlagos in Brazil, Ferrari decided to race with the system.

Nigel Mansell, one of the Ferrari driver's, was so convinced that it would break down, he apparently booked himself an early flight back. But although he qualified only

6th, the gearbox did not break and Mansell cut through the field, passing car after car until he caught up with Alain Prost, overtook him to win the race.



So by the middle of the 1990's, every F1 team was using the paddle gear change system, but it took Ferrari another 20 years before a major change came about. The trouble was that every time the paddle was used, the engine was cut out until after the change and although this only took approximately 100 ms, it was seen as a problem because although a small interval, the car slowed down a bit because of the wind drag and do it say 74 times per lap for 52 laps made a difference

So the challenge was to make the system simpler, faster and smaller. Now we who have worked on our old gearboxes know that the gears are engaged with selector forks the are fastened to selector rods, as per the picture

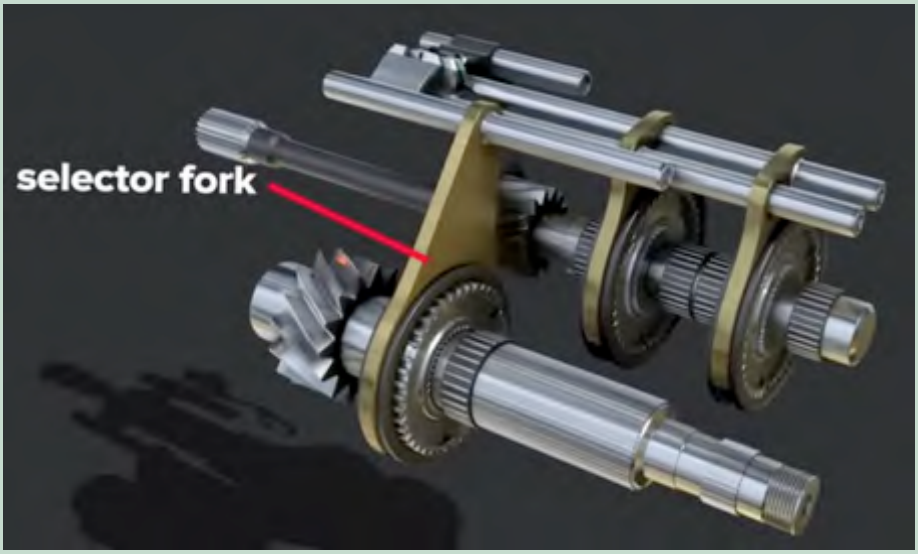

Do do this electronically, the system comprised at least four actuators, four pistons, four valves etc so they changed this and introduced the concept of a selector barrel, a rotating cylindrical drum with precisely cut grooves. where the selector forks ride inside these grooves. As the barrel rotates, the grooves force the forks to move laterally, which physically engages or disengages the dog rings and gears.are actuated by groves on this was fantastic, faster and far less complicated.

Editor's Tech Talk - The Evolution of Fi Gearboxes



The gears are engaged by the use of device called a dog link that sits between the gears and slides along the shaft to disengage one gear and engages the new gear. So when the driver pulls the paddle, the selector barrel rotates and slides the locking or dog ring from the one gear to the next



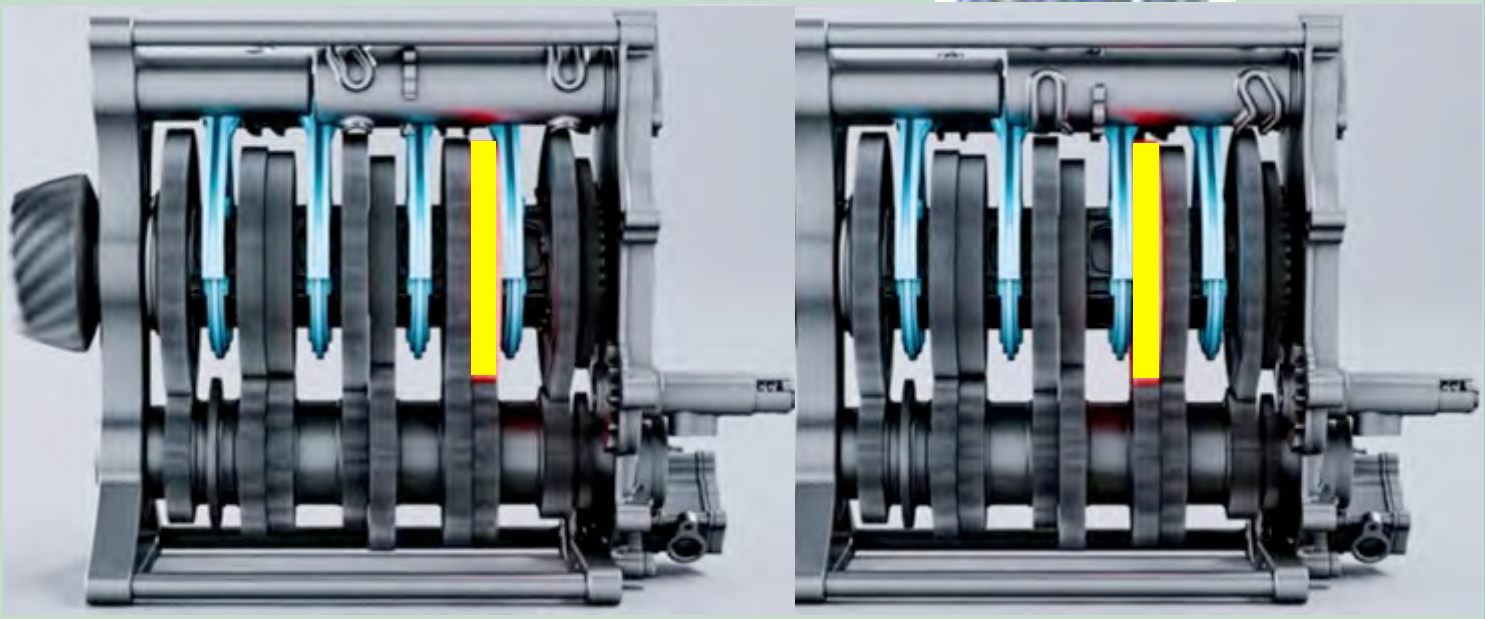

The use of a rotating drum of course implied that gear changes had to be done sequentially and by the early 2000's, this became the standard system for all the F1 teams. The gearboxes were now changing gears within 50 ms but there was still the necessary cut out of the engine to do the change and the search was now how to obtain changes without having to cut the engine power.

How they did it was first to introduce two rotating barrels that could operate independently from one another with one barrel activating the even gears and the other the uneven gears and because they operated independently you could start initiating the next gear before the current gear, still in place, was disengaged.

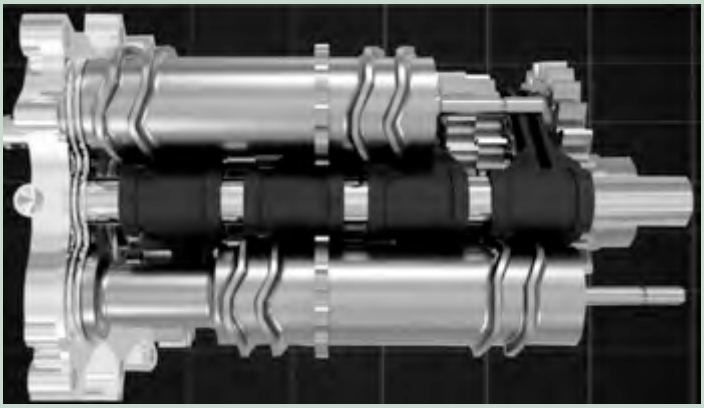

Editor's Tech Talk - The Evolution of Fi Gearboxes

So for example if you were in fourth gear and you pull the paddle for fifth, the second barrel starts to slide the fifth gear locking ring in place while the first barrel still holds fourth gear and because the only action was in the gears, this was done without any engine interruption so the use of the clutch was not necessary.

For a small window of about 2 ms both gears are engaged at the same time, and you would think that the gearbox should now tear itself apart, except for an insanely clever adaptation of the dog ring that has the small prongs that are on the dog ring having asymmetrical shapes, one side is steep, pulling a gear in, which engages it, while the other side of the prongs is angled and pushes the dog away, so the moment fifth gear is engaged and drives the output shaft at a higher speed, the angled side of the prong pushes fourth gear away and in so doing disengages it.

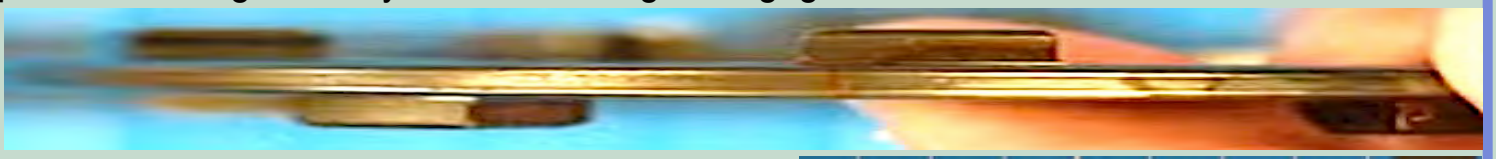

This happens while the engine is never slowed down, making for an invisible shift. This system will only work on upshifts as it relies on the fact that the output shaft increases revolutions with every upshift.

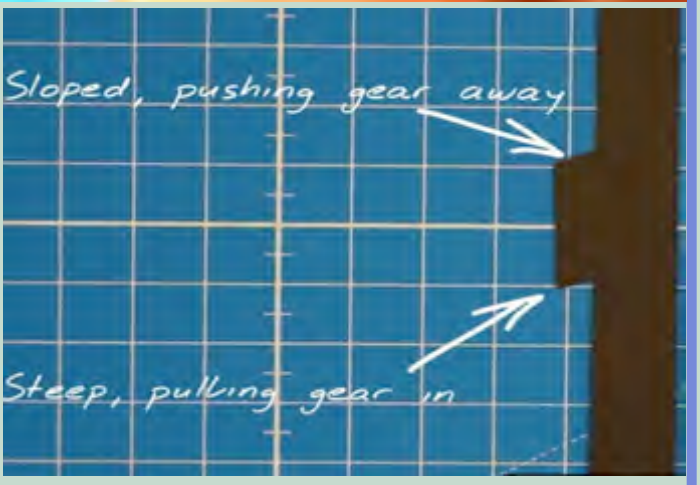

On downshifts, the goal is deceleration, If constant drive were maintained during downshifts, the resulting mechanical jolt would lock the rear wheels, causing catastrophic instability and oversteer, so the engine can be cut off and in fact,The engine management systems (via electronic throttle control) perfectly "blips" or rev-match the engine to meet the lower gear's higher RPM demands and exactly matches the speed to avoid wheel locking as the engine is engaged.

Some other facts;

F1 gearbox gears are straight-cut, the reason being they are highly efficient, transferring power directly without losing energy to the friction caused by eliminating the side-loading forces on shafts and bearings, (As is for helical gears) allowing the transmission to be lighter and more robust under extreme torque, of course, they produce a loud, distinctive whining noise and are generally not suitable for street cars.

The higher gears are actually located in the middle of the gearbox shafts, while the lower gears (first through fourth) are placed at the ends closer to the bearings. This is done for structural reasons: lower gears must withstand significantly higher torque, so they are positioned near the shaft bearings where they receive maximum physical support to handle the stress. The higher gears (fifth through eighth) experience less torque, so they are safely situated in the middle where the shaft's strength requirement is lower

So, just imagine the incredible exact engineering design detail in the barrel slots and other components to enable the exact execution of the timing and the subsequent precision engineering to fabricate these components because, if it is out even by a fraction of a millisecond, the gearbox will destroy itself, and now, F1 gearboxes last up to 10 races without a change



Acknowledgement The Old Faithful June 20206

Practical Motorist tests the Humber 'Snipe' Saloon



A luxurious large car with a remarkable performance and many novel features

There are few car-manufacturing concerns which in past years have not allowed their production policy to be influenced by the existence of the £1-per-horsepower taxation rate. Generally speaking, the industry has been sharply divided into the few makers of frankly expensive ears for the well-to-do, and the many manufacturers for the masses who have produced low-powered, inexpensive and reliable cars at increasingly better value for money. Between the two extremes a handful of concerns, among which the Humber company is one of the most notable, have found a market for cars of medium price, neither sensationally cheap nor prohibitively expensive.

This last group of manufacturers will obviously reap a decided advantage from this year's tax reduction. Humbers for instance make nothing smaller than a "Twelve" and their range goes up to the "80," a six-cylinder car rated at 23.8 h.p. The saving in tax on such power denominations is well worth having, the more so when the cars themselves can be bought at such a moderate figure as £550, for example.

We mention this price particularly because it is that of the "Snipe 80" Sports Saloon, a test run on which we are about to describe.



Showing the gearbox and free-wheel mechanism.



The sway eliminater fitted to Humber "Pullman" models.

Complete Specification

The "Snipe" group of models takes second highest place in the makers' price scale, which runs from the "Twelves" at £285 to £325, to the big "Pullman" models costing from £735 to £945. In between are the "16/60" and the "Snipe 80" series, identical in chassis specification except for the increased horsepower and higher gear ratios of the latter. The "80" chassis specification may be summarised as follows:-



Acknowledgement The Old Faithful June 20206

Practical Motorist tests the Humber 'Snipe' Saloon



A luxurious large car with a remarkable performance and many novel features

The engine is a side-valve six-cylinder unit with dimensions of 80 mm. by 116 mm., and cubic capacity of 3,498.5 ?.?. The rating is 23.8 h.p., the unit developing 77.8 b.h.p. at 3,400 r.p.m. A seven-bearing crankshaft is employed, statically and dynamically balanced and fitted with a vibration damper at the front end. A special suspension system, known as Cushioned Power, is employed for the engine and gearbox.

Automatic Carburettor and Temperature Controls

Ignition is by coil and distributor, with automatic advance and retard, The automatic (vacuum) control gives correct setting under all conditions. The fuel supply is by the Humber cyclonic induction system, now fitted with a new type of air silencer, of large diameter. The high efficiency down-draught carburettor is set to give rapid acceleration and a smooth flow of power at speeds. Two ingenious devices are incorporated in the fuel system, one, operated by the under-bonnet temperature, which controls the opening of the choke, allowing it to open fully only when the engine is thoroughly warmed up; and the other which automatically closes the radiator shutters immediately the engine stops, thus conserving the engine heat for long periods.

A clutch of the single dry-plate type, totally enclosed, is used. The four-speed gearbox has silent second and third speeds and synchromesh engagement for third and top, and a free wheel, controlled from the dashboard, provides clutch less gear change. A Hardy-Spicer dynamically balanced propeller shaft transmits the power to a spiral-bevel semi-floating type back axle with pressed-steel banjo casing.

Suspension is by semi-elliptic springs fitted with Luvax hydraulic shock absorbers, the front pair of these being transversely mounted, for improved suspension and stability.

Self-energising Brakes

Duo-servo self-energising brakes operate on all four wheels, a hand-brake lever being mounted on the driver's right. The steering is of the worm-and-nut type, self-centring, and light and positive in action. A strong, deep-sectioned frame with diagonal cross bracings is used. The five detachable wire wheels are equipped with 6.50 by 17 Dunlop tyres, and the electrical equipment includes a Lucas 12-volt lighting set, with automatic dynamo-output control; twin electric horns; dual screen wipers, with a silent motor concealed under the bonnet; dip-and-switch reflector headlamps; a "stop" light operated by brake pedal and an independent reverse light, worked by a gear lever when in reverse position.

Bodywork and Equipment

For all the sporting persuasion of its exterior lines, the Sports Saloon accommodates five people with a generous allowance of head, leg and elbow room. The bucket-type front



Acknowledgement The Old Faithful June 20206

Practical Motorist tests the Humber 'Snipe' Saloon



A luxurious large car with a remarkable performance and many novel features

seats are adjustable over a range of eight inches. The rear seats are supplied with folding footrests and a folding centre arm-rest, the side arm-rests being fixed.

The upholstery is in the finest-grade pleated furniture hide, and the cushions and squabs are well designed and exceptionally comfortable. The front compartment is furnished with a pile carpet, and the rear compartment with a wool mat. All fittings, both exterior and interior, are chromium plated, and Triplex glass is used throughout. The concealed traffic indicators are equipped with an automatic self-cancelling device. Besides ash-trays, cubby holes, cigar lighters and similar details, the Sports Saloon has a built-in luggage container and a full complement of tools, the wheel-changing gear being housed under the bonnet.

On the Road

Our test run of the Snipe "80" consisted of a long and pleasant journey from the Midlands to the South Coast and back again-some 500 miles in all. This naturally gave us the opportunity of proving its qualities under very varied conditions of road surface, traffic conditions and weather, and on no occasion could we find any detail for serious criticism in the car's behaviour.



Here is shown the large-diameter air silence and filter, fitted to all Humber models

From the first we noticed, signs of extreme willingness in the engine, and in the course of discovering to what lengths this would go we reached a speedometer reading of 80 m.p.h. Though it is not, of course, possible to maintain such a speed for very long on the roads of this country, we noted that the engine seemed as happy and effortless at this speed as though it had been no more than 55 to 60 m.p.h. It was at "60," which is admittedly a very fair average, that we covered considerable stretches of our outward journey, and found the speed thoroughly pleasant both, as regards riding and driving comfort. There was no sense of undue fatigue at the end of the journey, either; indeed, as far as physical reaction was concerned, we might have come the whole way at a cautious 45 m.p.h. or so.

Excellent Braking Figures

Good braking is such a very essential adjunct to high speed that we made special tests of the brakes, and found them remarkably efficient, as the following figures will show the car could be brought to a standstill from 20 m.p.h. in 5 yards, from 30 m.p.h. in 11½ yards, and from 40 m.p.h. in 20 yards. The brakes were gradual and even in operation, and were not to be betrayed by the most sudden application into any tendency to skid or swerve the car.

The fact that the high average speed referred to above was maintained with comfort and confidence is sufficient indication of the good road holding and steering. The suspension also we found beyond reproach, and the whole standard of riding comfort noticeably high.

A word as to acceleration-this was brisk enough to satisfy the most exacting demands, and powerful in exact proportion to the smoothly-developed power of the unit itself. Forty m.p.h. could be reached from a standstill, through the gears, in 122/3 sec-



Acknowledgement The Old Faithful June 20206

Practical Motorist tests the Humber 'Snipe' Saloon



A luxurious large car with a remarkable performance and many novel features

onds, and the top gear test of from 10 to 30 m.p.h., occupied 9 seconds only.



This illustration shows the torque-reaction member fitted to the front axle

SPECIFICATION IN BRIEF

ENGINE.-Six cylinders, 80 mm. bore, 116 mm. stroke, 3,498.5 c.c. capacity; Treasury rating, 23.8 h.p.; tax, £18; brake horsepower at 3,400 r.p.m., 77.8. Seven-bearing crankshaft with vibration damper.

IGNITION.-Coil, with automatic advance and retard.

FUEL SUPPLY.-Humber cyclonic induction; rear tank and down-draught carburettor, with silencer; temperature-controlled choke.

GEARBOX.-Four-speed, with synchronised top and third; free-wheel with dashboard control gives automatic gear change.

SUSPENSION.-Semi-elliptic springs with Luvax shock absorbers and front pair transversely mounted.

BRAKES.-Duo-servo, self-energising on all wheels.

PERFORMANCE. Maximum speed, 80 m.p.h.; acceleration, from standing start to 40 m.p.h. (through gears), 12 seconds; 10-30 m.p.h. in top gear, 9 seconds. Fuel consumption during 500-mile test, 17 m.p.g.

PRICE OF CAR TESTED. £550.

2nd March 1935



The End



By Rick Harrison (Sunbeam Owners Club New South Wales)



Some items that are scarce today going to rust..windshield, boot hinges etc. so sad

